REVISIONS			
REV	DESCRIPTION	DATE	APPROVED
0.1	INITIAL RELEASE	WW1802	
0.2	KEEP OUT DESCRIPTION	WW1810	

RECOMMEND PCB PATTERN

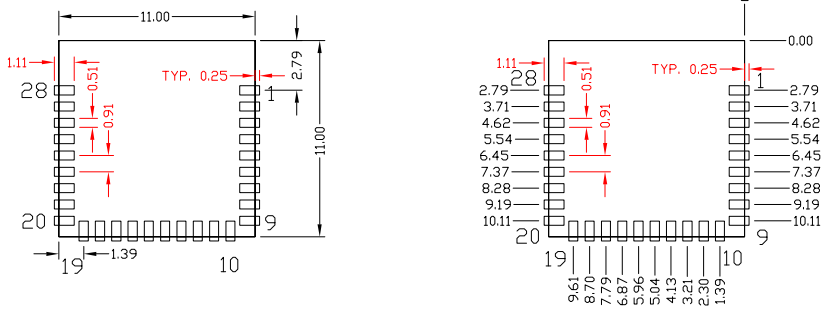

MODULE PAD ASSIGNMENT:

PAD1:GND
PAD2:HOST_WAKE
PAD3:UART_RXD
PAD4:UART_TXD
PAD5:UART_RTS_N
PAD6:UART_CTS_N
PAD7:P2
PAD8:VCC
PAD9:P6
PAD10:GND
PAD11:XRES
PAD12:P33
PAD13:P25
PAD14:P26
PAD15:P38
PAD16:P34/P35/P36
PAD17:P1
PAD18:P0
PAD19:P29
PAD20:P13/P23/P28
PAD21:P10/P11
PAD22:P17
PAD23:P7
PAD24:P4
PAD25:P16
PAD26:XTALI_32K/P15
PAD27:XTALO_32K
PAD28:GND

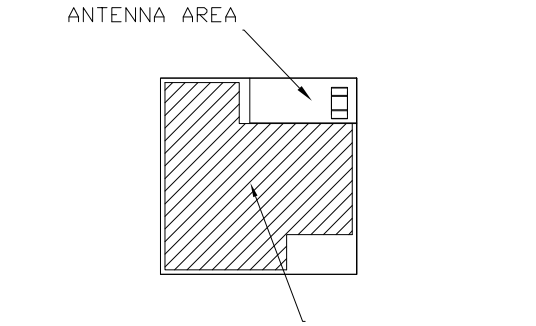

SEEN FROM TOP

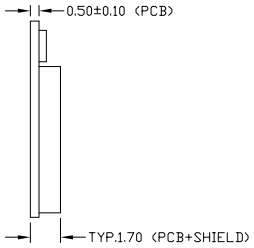

SEEN FROM SIDE

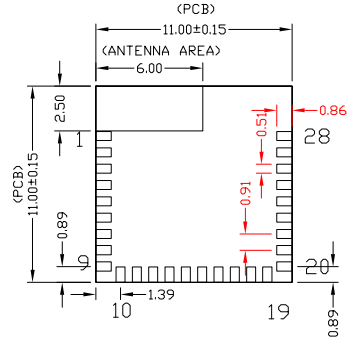

SEEN FROM BOTTOM



SCALE 1:1

UNLESS OTHERWISE SPECIFIED	SIGNATURES	DATE
DIMENSIONS ARE IN MM	DRAWN:	WW1810
TOLERANCES ON:	CHECKED	
+/- 0.15 MM	ENGRG	
ANGLES +/-0.5 DEGREE	ISSUED	

CYPRESS SEMICONDUCTOR Corp.

CYBT-423028-02

SIZE	REV NO	DWG NO
	0.2	

SCALE 5:1 | THE 3RD PROJECTION | SHEET: 1 OF 1

HOST PCB KEEP OUT AREA AROUND ANTENNA

1. TO PLACE THE BLE MODULE AT THE EDGE OF THE HOST BOARD.
2. KEEP OUT THE HOST BOARD ON ALL LAYERS.
3. ADDITIONAL KEEP OUT TO COVER COMPLETE MODULE AREA WILL HAVE THE BEST RF PERFORMANCE/DISTANCE.

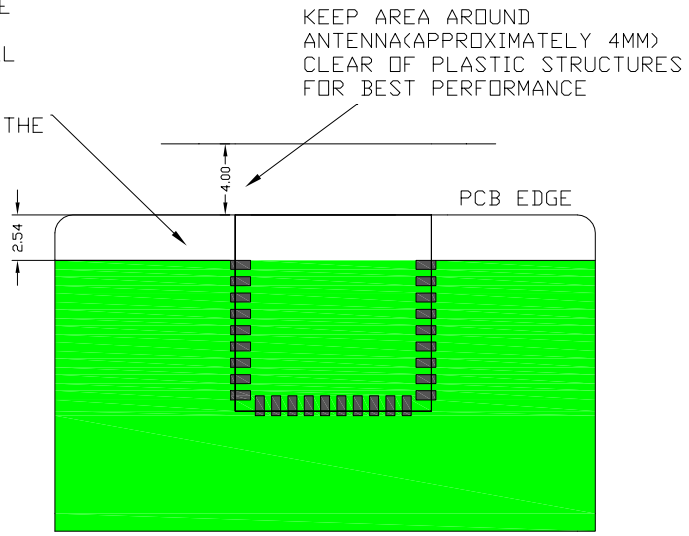

PAD DIMENSION

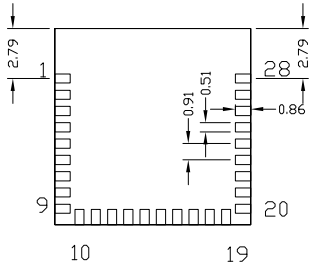

Solder Pad (Center of Pad)	Location (X,Y) from Orign (mm)	Dimension from Orign (mil)
1	(0.31, 2.79)	(12.20, 109.84)
2	(0.31, 3.71)	(12.20, 146.06)
3	(0.31, 4.62)	(12.20, 181.89)
4	(0.31, 5.54)	(12.20, 218.11)
5	(0.31, 6.45)	(12.20, 253.94)
6	(0.31, 7.37)	(12.20, 290.16)
7	(0.31, 8.28)	(12.20, 325.98)
8	(0.31, 9.19)	(12.20, 361.81)
9	(0.31, 10.11)	(12.20, 398.03)
10	(1.39,10.69)	(54.72, 420.87)
11	(2.30,10.69)	(90.55, 420.87)
12	(3.21,10.69)	(126.38, 420.87)
13	(4.13,10.69)	(162.60, 420.87)
14	(5.04,10.69)	(198.42, 420.87)
15	(5.96,10.69)	(234.65, 420.87)
16	(6.87,10.69)	(270.47, 420.87)
17	(7.79,10.69)	(306.69, 420.87)
18	(8.70,10.69)	(342.52, 420.87)
19	(9.61,10.69)	(378.35, 420.87)
20	(10.69,10.11)	(420.87, 398.03)
21	(10.69,9.19)	(420.87, 361.81)
22	(10.69,8.28)	(420.87, 325.98)
23	(10.69,7.37)	(420.87, 290.16)
24	(10.69,6.45)	(420.87, 253.94)
25	(10.69,5.54)	(420.87, 218.11)
26	(10.69,4.62)	(420.87, 181.89)
27	(10.69,3.71)	(420.87, 146.06)
28	(10.69,2.79)	(420.87, 109.84)

SOLDER PAD AND LOCATION

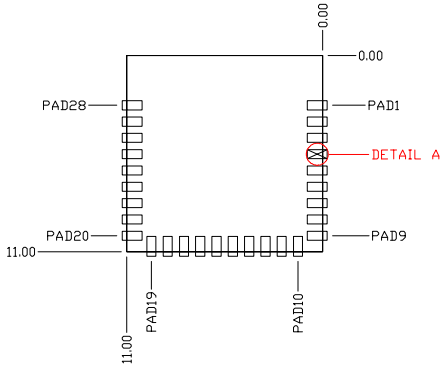

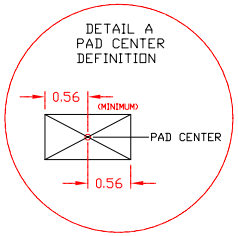

UNLESS OTHERWISE SPECIFIED	SIGNATURES	DATE
DIMENSIONS ARE IN MM	DRAWN:	WW1810
TOLERANCES ON:	CHECKED	
+/- 0.20 MM	ENGRG	
ANGLES +/-0.5 DEGREE	ISSUED	

CYPRESS SEMICONDUCTOR Corp.

CYBT-423028-02

SIZE	REV NO	DWG NO
	0.2	

SCALE 5:1 | THE 3RD PROJECTION | SHEET: 2 OF 2